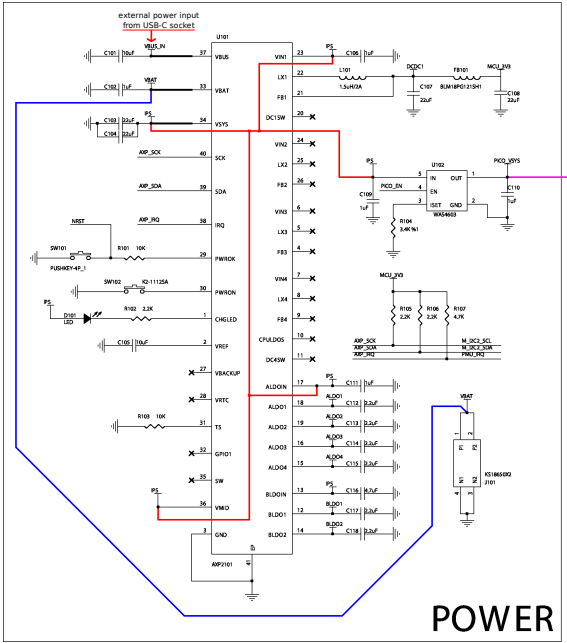
external power input
from USB-C socket
VBUS_IN
U101
VBUS
VBAT
VSYS
SCK
SDA
IRQ
PWRDK
PWRON
CHGLED
VREF
VBACKUP
VRTC
TS
GPIO1
SW
VMID
GND
VIN1
LX1
FB1
DC15W
VIN2
LX2
FB2
VIN3
LX3
FB3
VIN4
LX4
FB4
CFULDOS
DC45W
ALDOIN
ALDO1
ALDO2
ALDO3
ALDO4
BLDOIN
BLDO1
BLDO2
AXP2101
C101 10uF
C102 1uF
C103 22uF
C104 22uF
AXP_SCK
AXP_SDA
AXP_IRQ
NRST
SW101
PUSHREY-4P_1
R101 10K
SW102 K2-11125A
R102 2.2K
D101 LED
C105 1uF
R103 10K
C106 1uF
L101 1.4uH/2A
DCDC1
C107 22uF
FB101 BLM18PE12SH1
MCU_3V3
C108 22uF
U102
IN
OUT
EN
ISET
GND
WA2403
PICO_EN
C109 1uF
R104 6.4K %1
PICO_VSYS
C110 1uF
R105 2.2K
R106 2.2K
R107 4.7K
M_I2C1_SCL
M_I2C1_SDA
PMIC_IRQ
C111 1uF
C112 2.2uF
C113 2.2uF
C114 2.2uF
C115 2.2uF
C116 4.7uF
C117 2.2uF
C118 2.2uF
VBAT
J101
XS1B65010
POWER

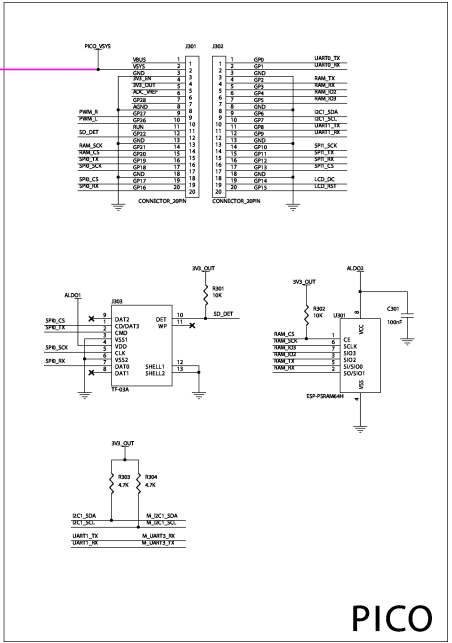
PICO_VSYS
J301
VBUS
VSYS
GND
3V3_EN
ADC_VREF
GP28
ADC0
GP27
GP26
RUN
GP22
GND
GND
GP21
GND
GP20
GP19
GP18
GND
GP17
GP16
PWM_R
PWM_L
SD_DET
RAM_SCK
RAM_CS
SPIE_TX
SPIE_SCK
SPIE_CS
SPIE_RX
CONNECTOR_30PIN
J303
GP0
GP1
GND
GP2
GP3
GP4
GP5
GND
GP6
GP7
GND
GP8
GP9
GND
GP10
GP11
GP12
GND
GP13
GP14
GP15
UART0_TX
UART0_RX
I2C1_SDA
I2C1_SCL
UART1_TX
UART1_RX
SPI1_SCK
SPI1_TX
SPI1_RX
SPI1_CS
LCD_DC
LCD_RST
CONNECTOR_30PIN
3V3_OUT
R301 10K
SD_DET
ALDO1
J303
SPIB_CS
SPIB_TX
SPIB_SCK
SPIB_RX
DAT2
CD/DAT3
CMD
VSS1
VDD
CLK
VSS2
DAT0
DAT1
DET
WP
SHELL1
SHELL2
TF-03A
3V3_OUT
ALDO1
R302 10K
U301
RAM_CS
RAM_SCK
RAM_IO3
RAM_IO2
RAM_TX
RAM_RX
CE
SCLK
SIO3
SIO2
SI/SIO0
SO/SIO1
VCC
VSS
ESP-PSRAM64H
C301 100nF
3V3_OUT
R303 4.7K
R304 4.7K
I2C1_SDA
I2C1_SCL
M_I2C1_SDA
M_I2C1_SCL
UART1_RX
UART1_TX
M_UART1_RX
M_UART1_TX
PICO